IR ZTAWS

Ceramic Resonator

Item	Specification
Oscillation Frequency	1,79 ~ 6,00 MHz
Frequency Accuracy	±0,5%
Resonant Impedance (Ω) max	30
Temperature Coefficient of Oscillation Frequency max	±0,3% (Oscillation Frequency drift -25°C ~+85°C)
Aging Rate max for ten years	±0,3%
Rating Voltage max	6 VDC 15Vp-p
Insulation Resistance	100M Ω min
Withstanding Voltage	100 VDC, 5 second max

Dimensions: (Unit: mm)

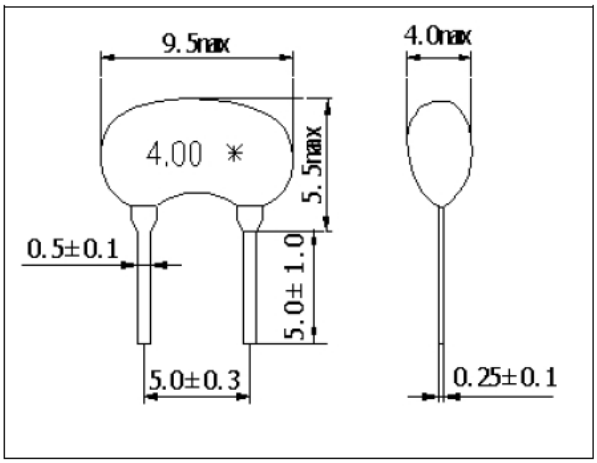

Test Circuit:

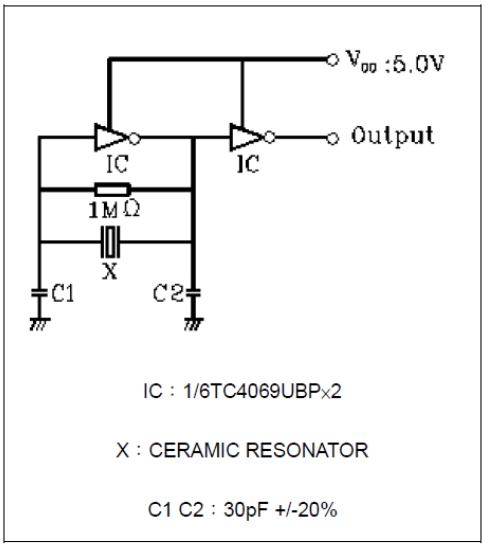

Intertec Components GmbH
Lilienthalstr. 17a
85399 Hallbergmoos/Germany

Tel: +49-811-996799-0
Fax: +49-811-996799-20

service@red-frequency.com
www.red-frequency.com

Edition August 2015