IC 8

Clock Crystal

Dimensions l/w/h in mm (max)	**7,0 x 1,5 x 1,4**
Frequency	32,768 KHz
Operating Temperature	Refer to Ordering Guidance
Frequency Tolerance at 25°C	Refer to Ordering Guidance
Frequency Stability at -40°C to +85°C	-0,034 ppm ± 0,008/°C² typ.
Storage Temperature	-55°C to +125°C
Load Capacitance (CL)	12,5 pF
Shunt Capacitance (C0)	0,8 pF typ.
Series Resonance (R1)	65 KOhm max.
Drive Level µW	0,1 typ. 1,0 max
Aging (df/F) first year at 25°C	± 3 ppm

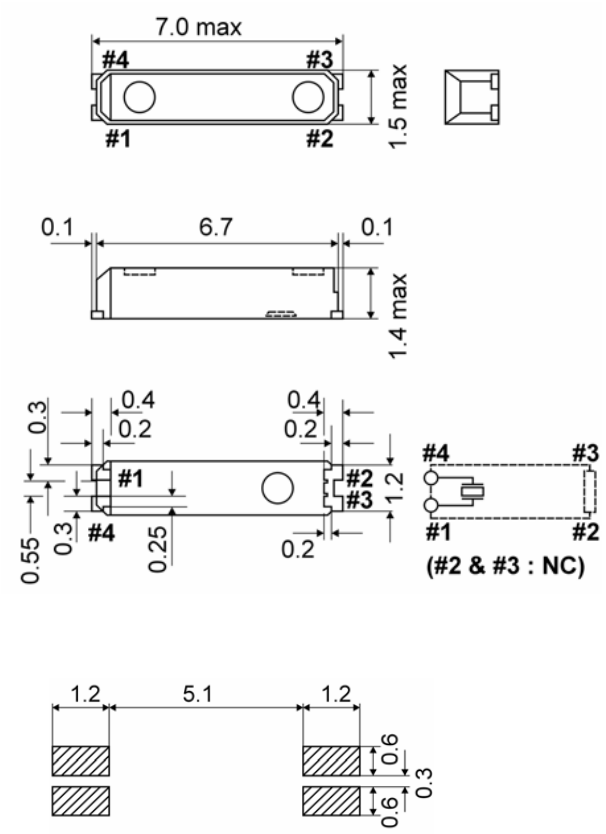

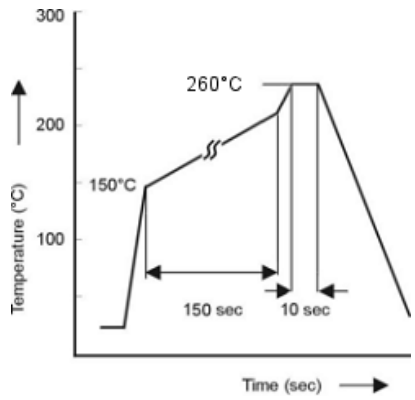

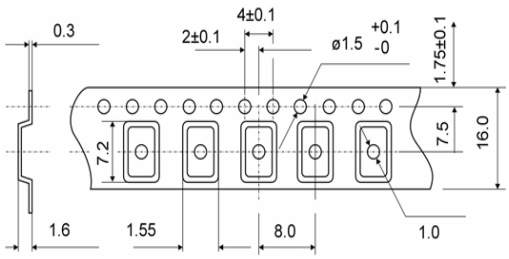

Intertec Components GmbH
Lilienthalstr. 17a
85399 Hallbergmoos/Germany

Tel: +49-811-996799-0
Fax: +49-811-996799-20

service@red-frequency.com
www.red-frequency.com

Edition August 2015